Distribuidor exclusivo para la República Argentina
T. 011 4222 5040 - F. 011 4201 2478
www.tekmatic.com.ar - info@tekmatic.com.ar

GMX25XS-B Brake Caliper

See data sheet DS2600 for Caliper dimensions and fixing holes.

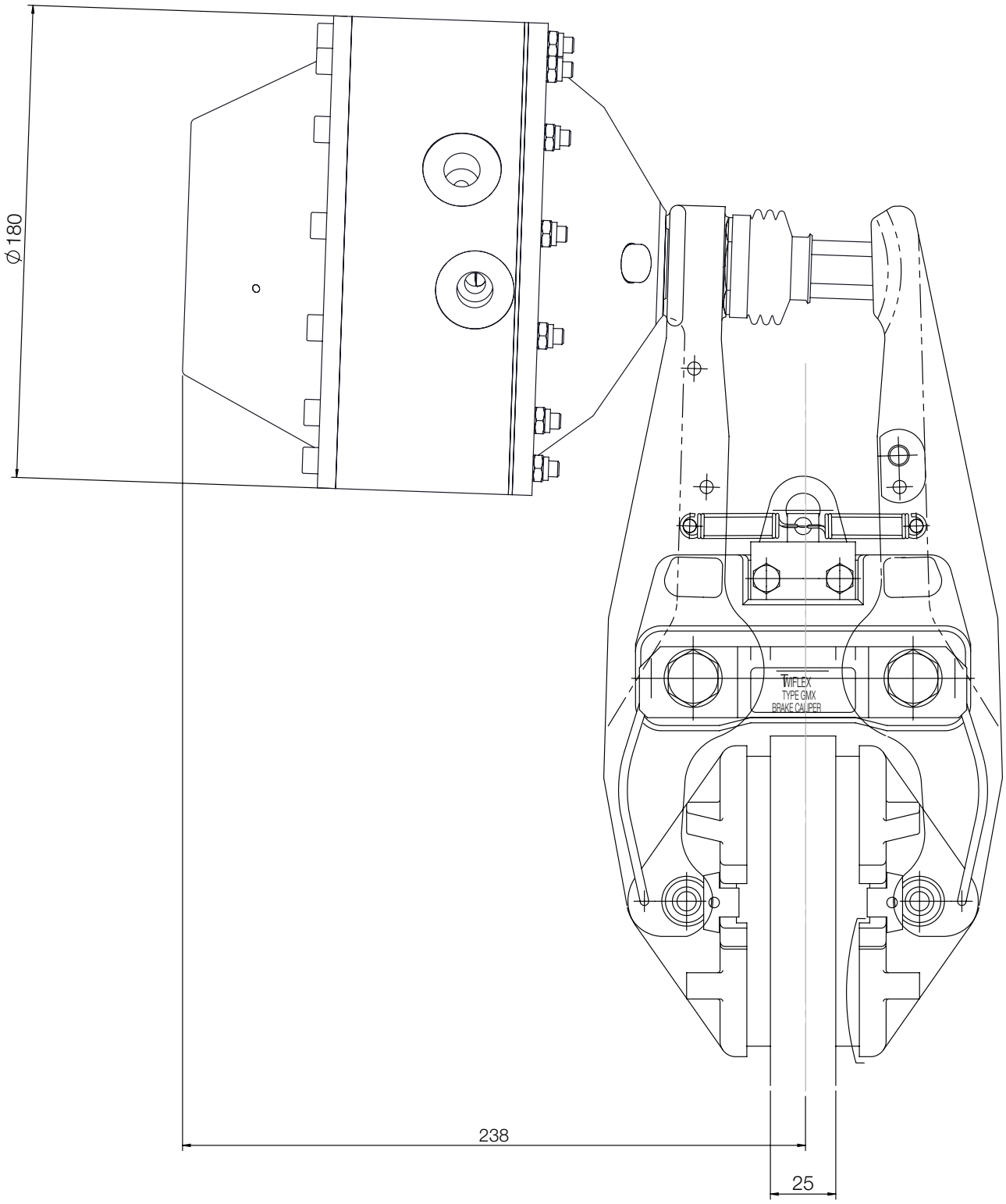

Twiflex Disc Brakes must be used with Twiflex asbestos free brake pads. The use of any other brake pads will invalidate the warranty. Twiflex Limted reserves the right to modify or change the design without prior notice.

TEKMATIC
Distribuidor exclusivo para la República Argentina
T. 011 4222 5040 - F. 011 4201 2478
www.tekmatic.com.ar - info@tekmatic.com.ar

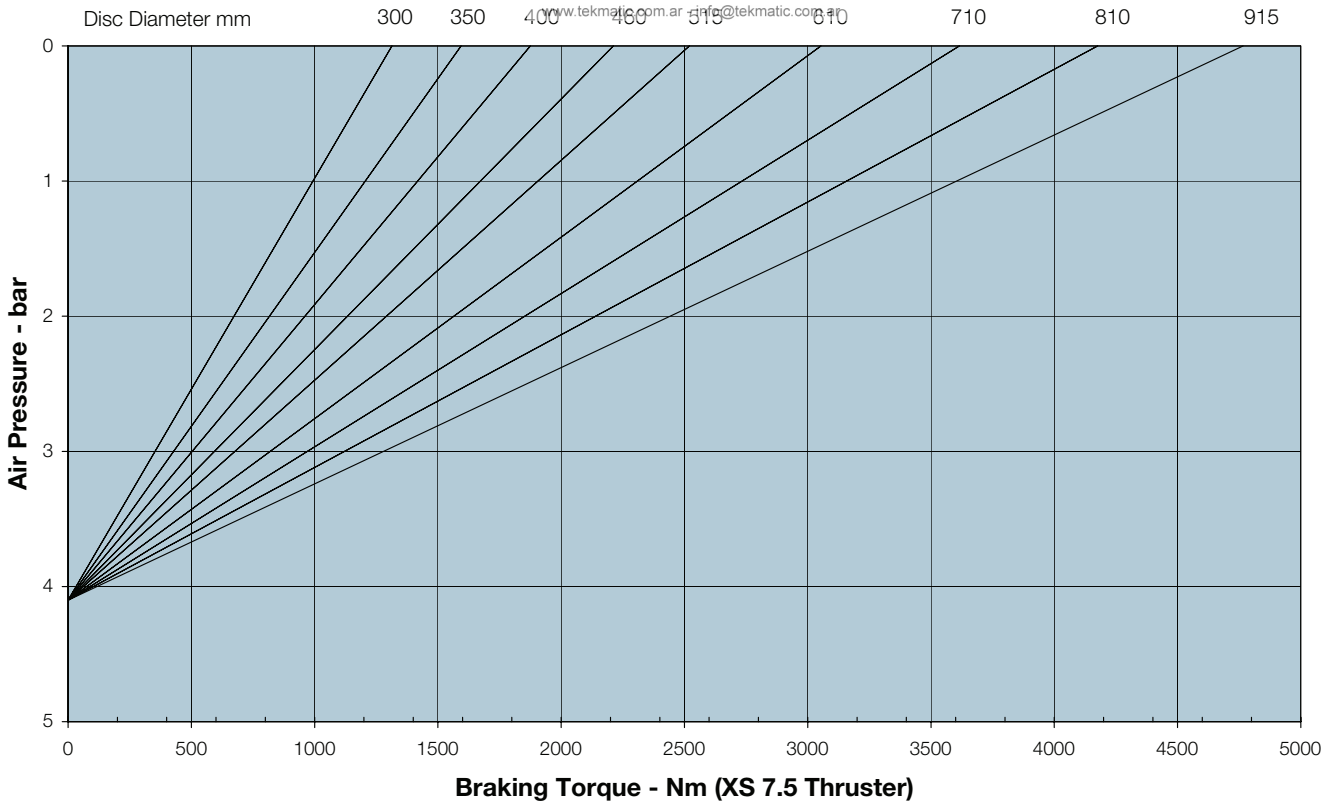

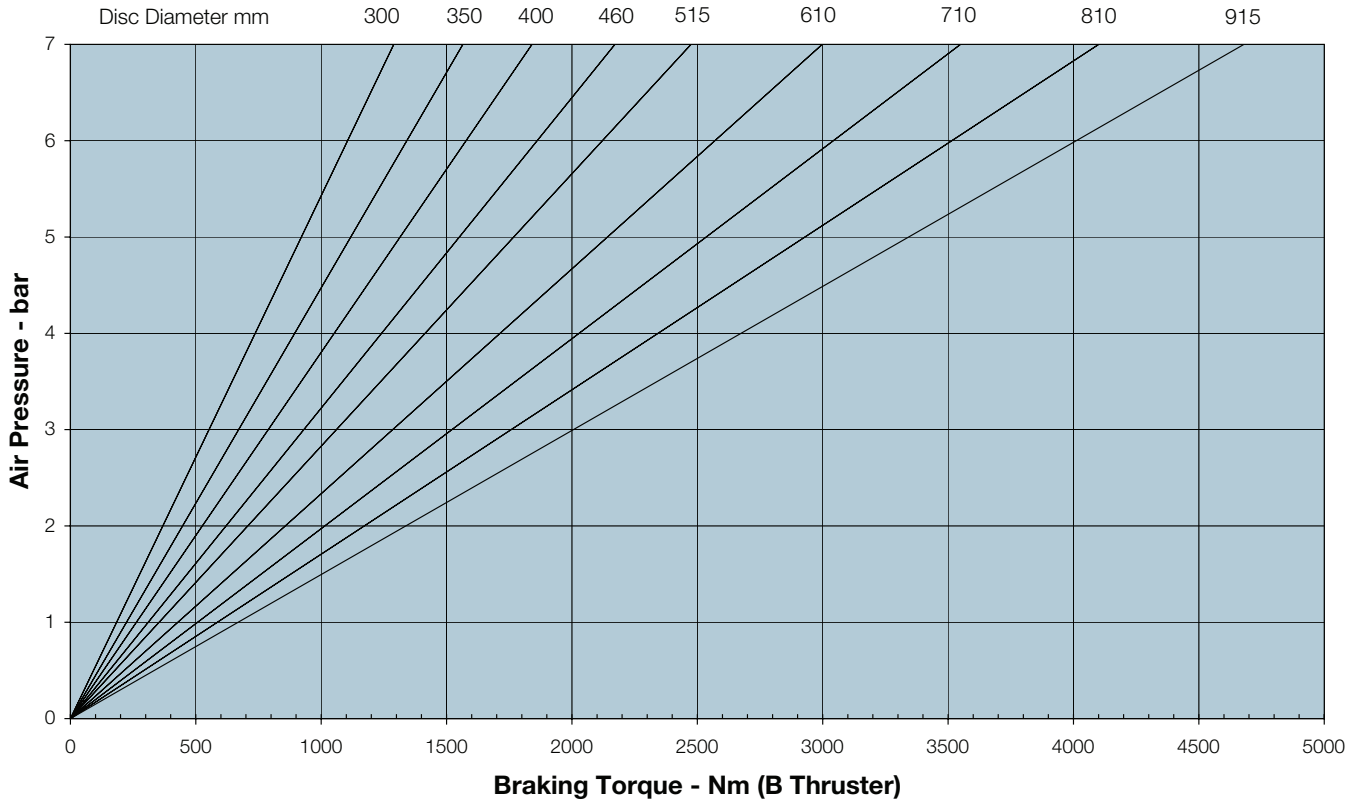

Twiflex® Limited
An Altra Industrial Motion Company

www.twiflex.com
9 Briar Road, Twickenham
Middlesex TW2 6RB - England
+44 (0) 20 8894 1161
Fax: +44 (0) 20 8755 5601

This approval is in Accordance with
Certificate number 850822
Issue 04 June 2009 © Twiflex 2001